DRAWING No. 003
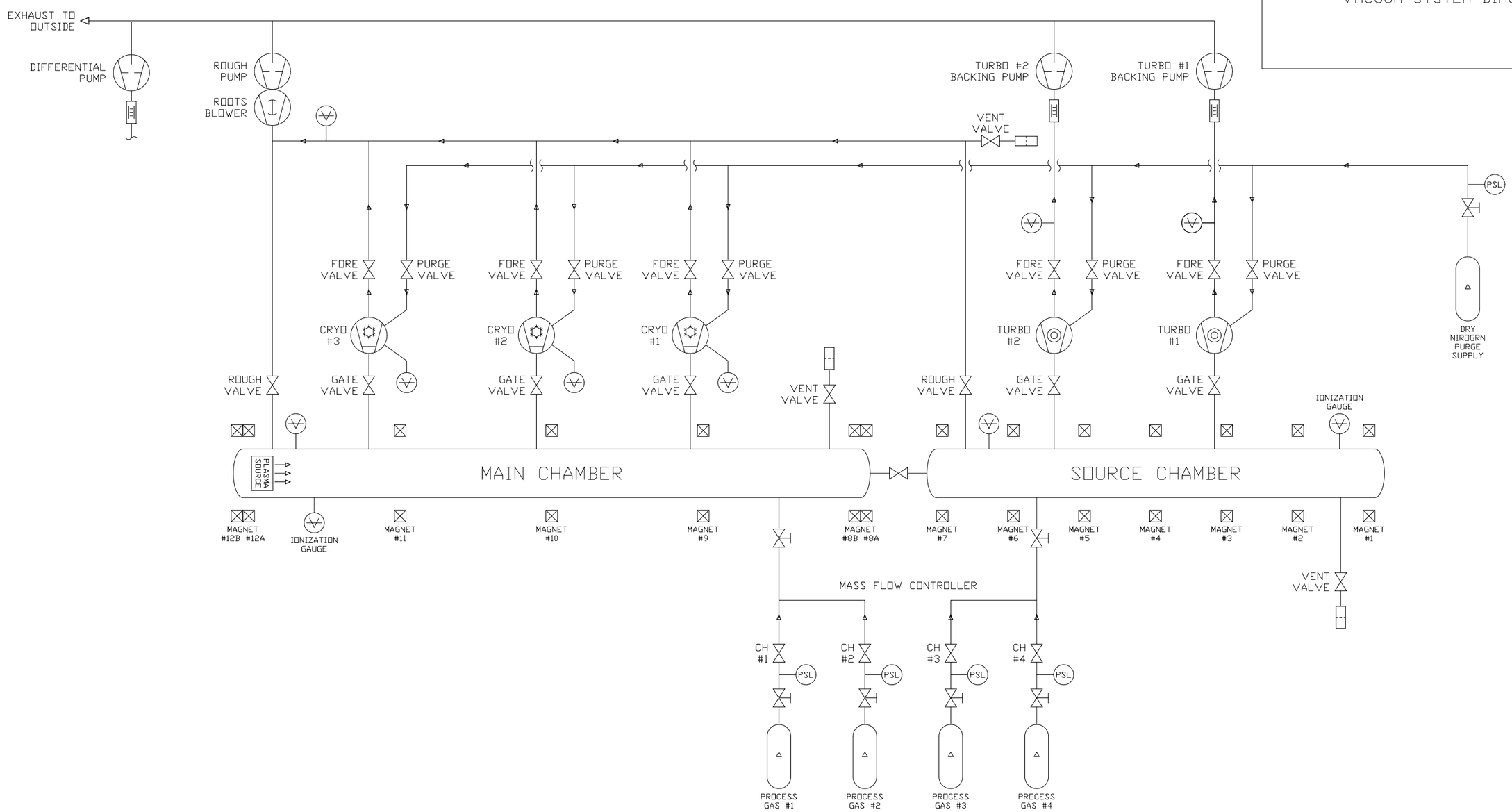
SPACE EXPERIEMNTS SECTION
VACUUM SYSTEM DIAGRAM